DO NOT SCALE DRAWING

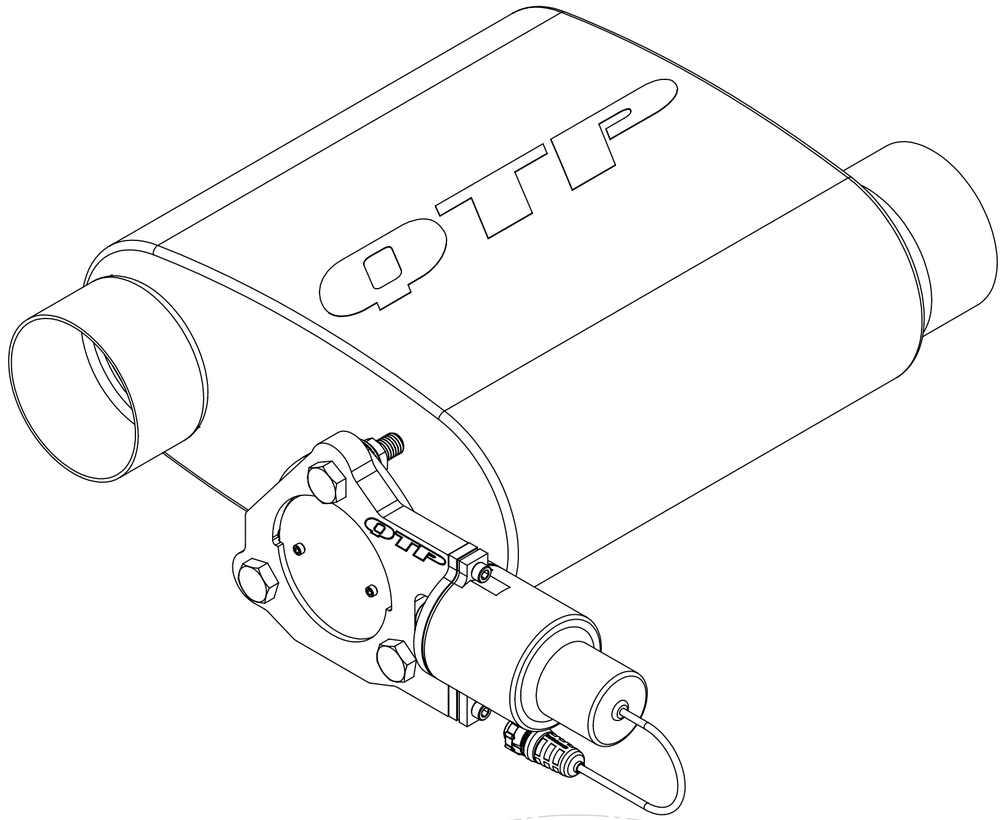

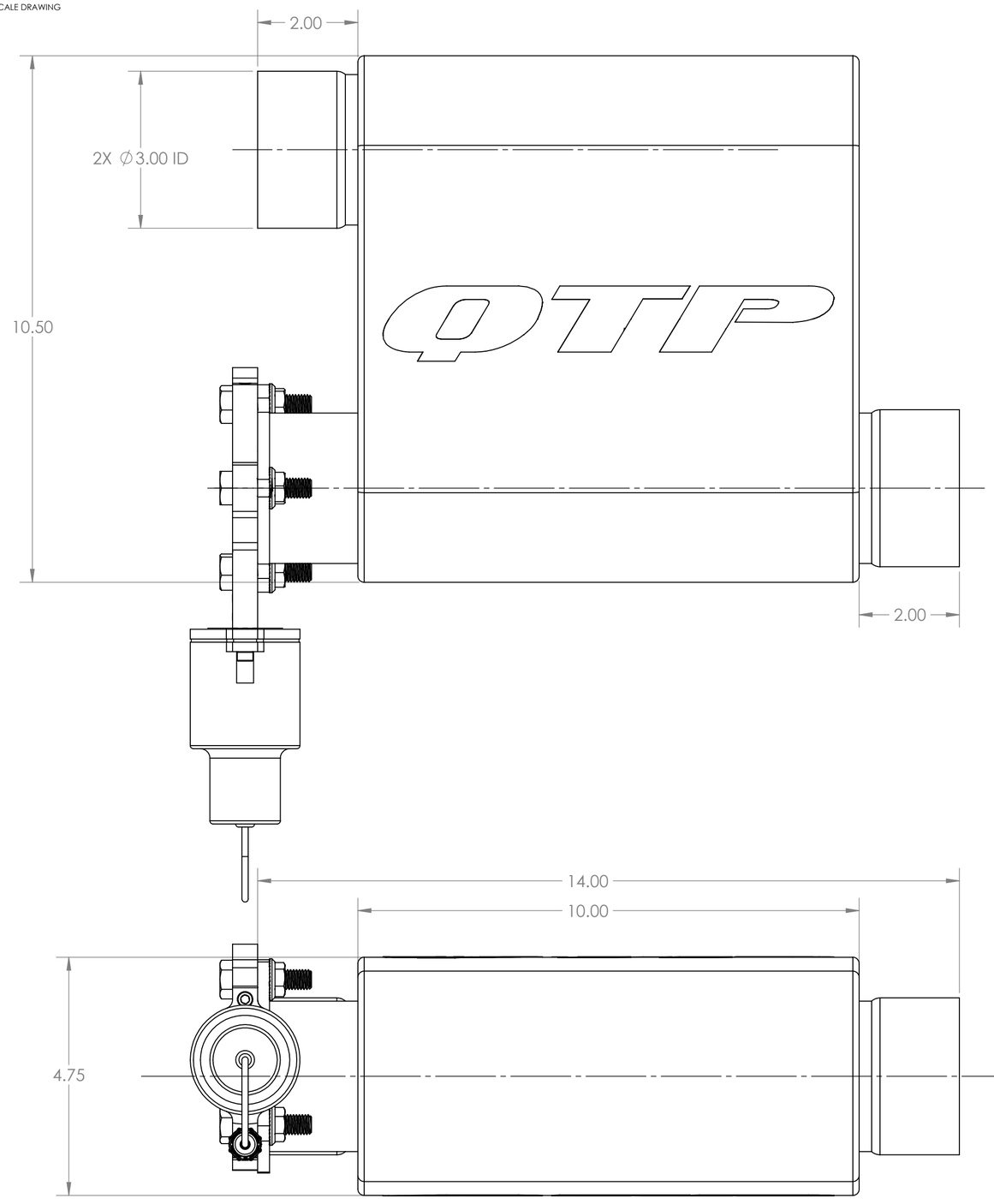

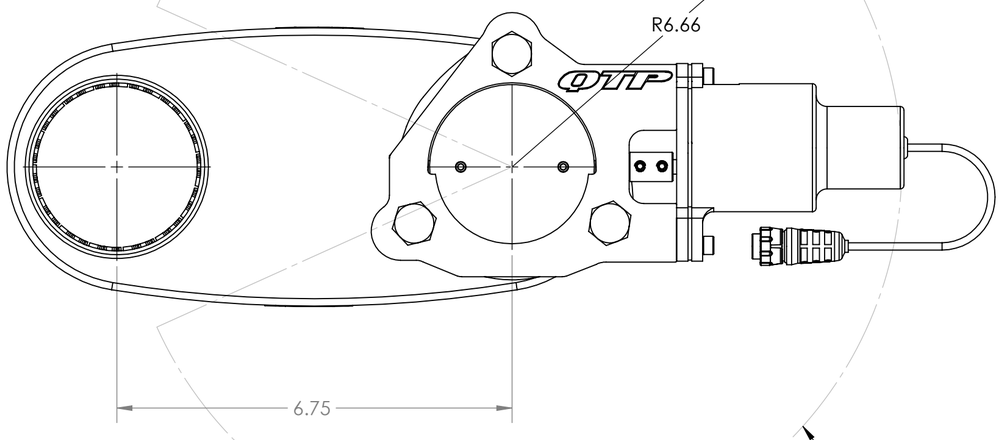

POSSIBLE VALVE POSITIONS

QTP QUICK TIME PERFORMANCE

UNLESS OTHERWISE SPECIFIED:

INTERPRET WELDING SYMBOLS PER AWS A2.4:2007
INTERPRET SURFACE TEXTURE SYMBOLS PER ASME Y14.36-1996

INTERPRET DIMENSIONS & TOLERANCES PER ASME Y14.5M-1994

3RD ANGLE

UNITS: INCHES

TWO PLACES ± .02
THREE PLACES ± .01
ANGULAR ± 1

FILLETS R.002/R.020
BREAK EDGES .002/.020 RADIUS OR CHAMFER
GENERAL FINISH 63 Ro MAX
REMOVE ALL BURRS

MATERIAL

THIS DRAWING AND THE CONTENTS HERIN ARE CONFIDENTIAL AND THE SOLE PROPERTY OF QUICK TIME PERFORMACNE REPRODUCTION OF THIS DRAWING OR CONSTRUCTION OF ANY PARTS WITHIN THIS DRAWING ARE FORBIDDEN WITHOUT PRIOR WRITTEN CONSENT

FINISH

DRAWN BY	DATE	CHECKED BY	DATE
MP	8/16/18		

COMMENTS

TITLE: 3.0" SCREAMER MUFFLER SHORT CASE REVERSE

WEIGHT:

SIZE	DWG. NO.	REV
C	13303_PDS	

SHEET	SCALE:
1 OF 1	1:2