DO NOT SCALE DRAWING

FOR REFERENCE ONLY

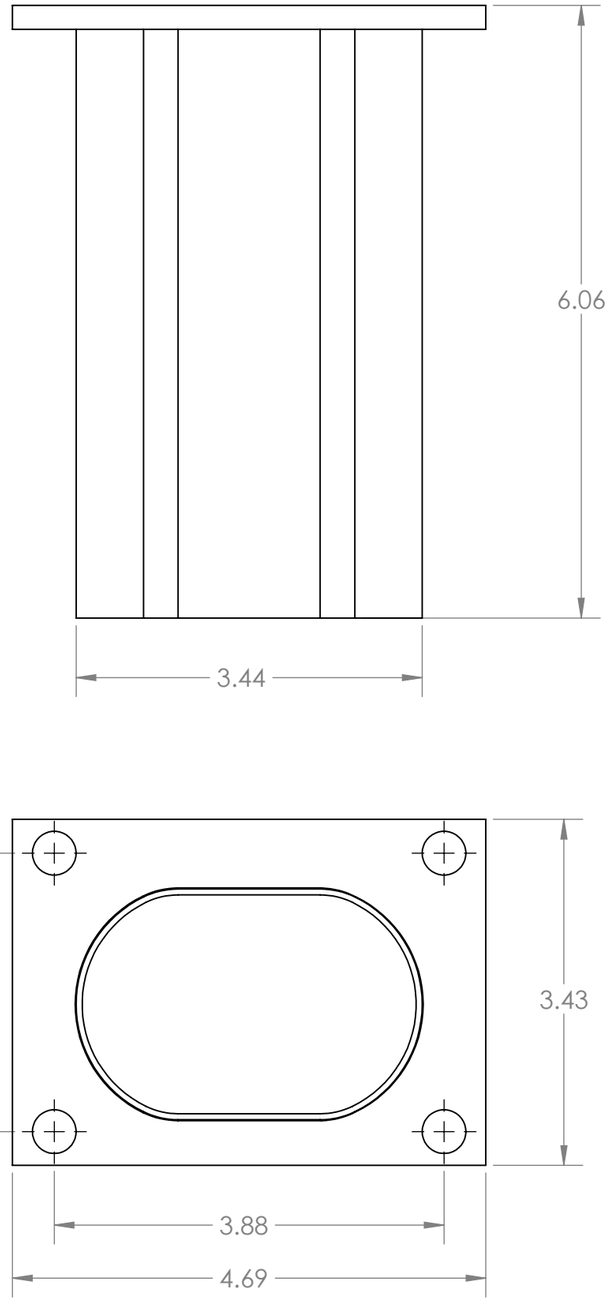

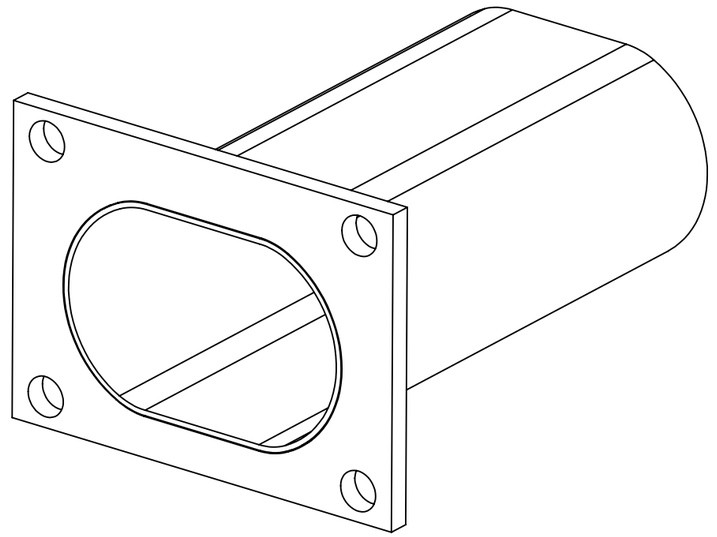

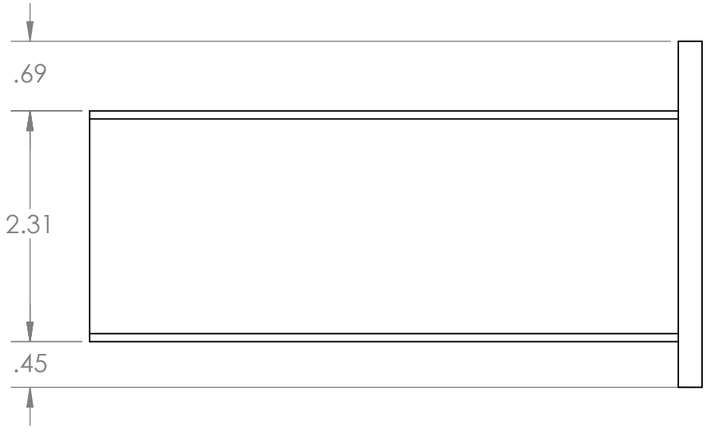

QTP QUICK TIME PERFORMANCE

UNLESS OTHERWISE SPECIFIED:

INTERPRET WELDING SYMBOLS PER AWS A2.4:2007
INTERPRET SURFACE TEXTURE SYMBOLS PER ASME Y14.36-1996

INTERPRET DIMENSIONS & TOLERANCES PER ASME Y14.5M-1994

3RD ANGLE

UNITS: INCHES

ONE PLACE ± .030
TWO PLACES ± .020
THREE PLACES ± .010
ANGULAR ± 1

FILLETS R.002/R.020
BREAK EDGES .002/.020 RADIUS OR CHAMFER
GENERAL FINISH 128 Ra MAX
REMOVE ALL BURRS

MATERIAL

FINISH

THIS DRAWING AND THE CONTENTS HERIN ARE CONFIDENTIAL AND THE SOLE PROPERTY OF QUICK TIME PERFORMACNE REPRODUCTION OF THIS DRAWING OR CONSTRUCTION OF ANY PARTS WITHIN THIS DRAWING ARE FORBIDDEN WITHOUT PRIOR WRITTEN CONSENT

DRAWN BY	DATE	CHECKED BY	DATE
MP	4/20/2020		

COMMENTS

TITLE:

OVAL CONNECTION TUBE

WEIGHT:

SHEET	SCALE:	SIZE	DWG. NO.	REV
1 OF 1	1:1.5	B	10338_PDS	

DO NOT SCALE DRAWING

FOR REFERENCE ONLY

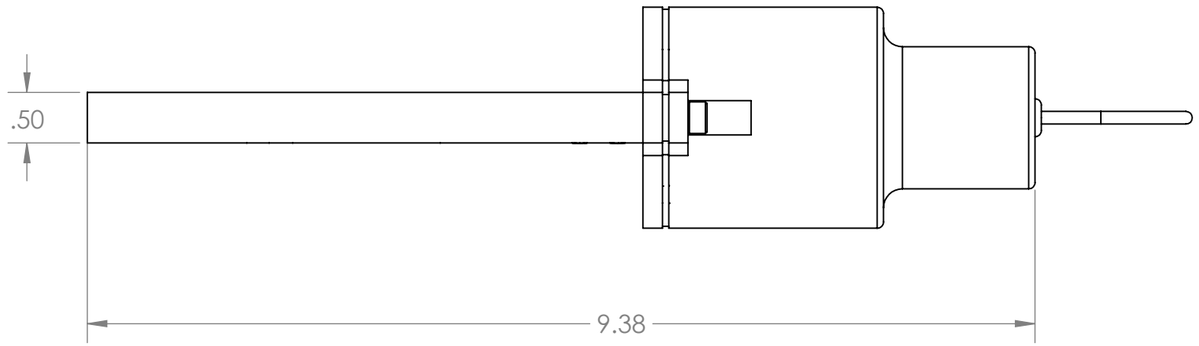

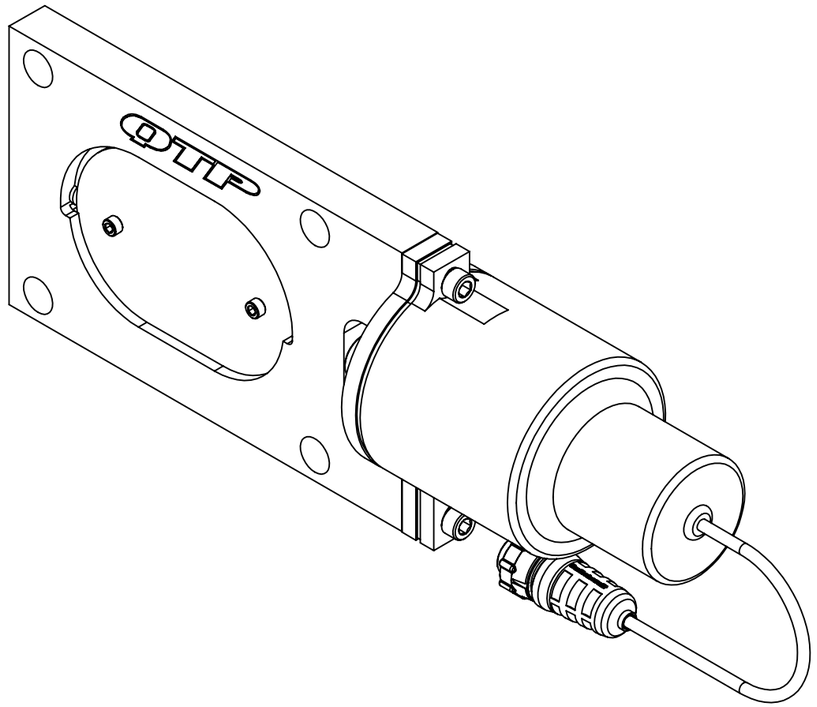

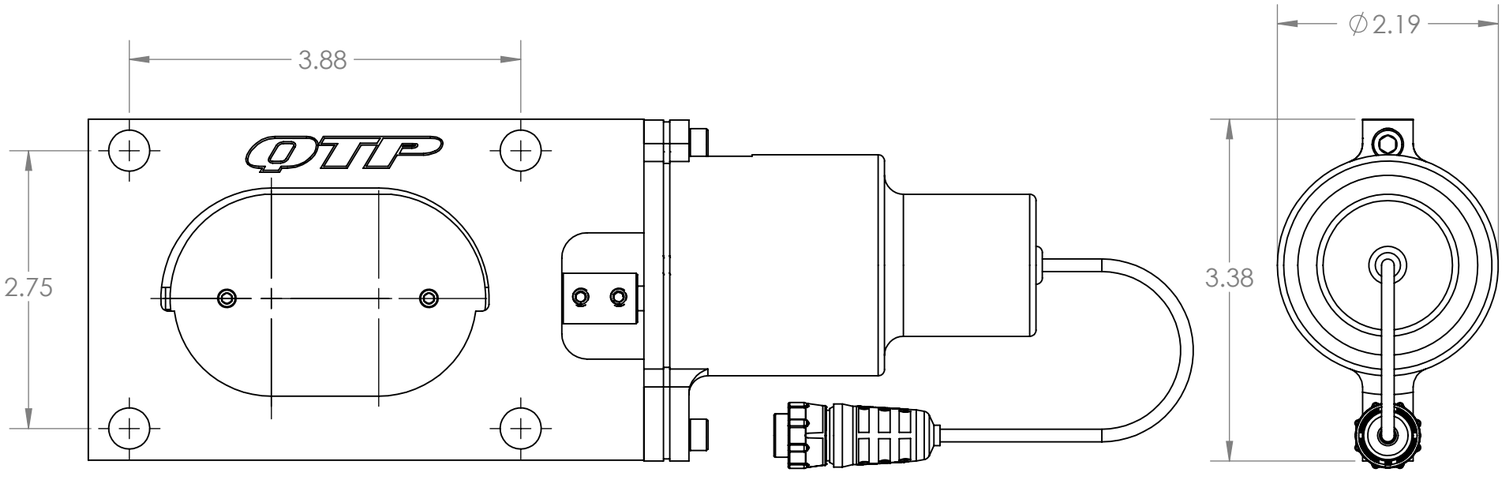

QUICK TIME PERFORMANCE

UNLESS OTHERWISE SPECIFIED:

INTERPRET WELDING SYMBOLS PER AWS A2.4:2007
INTERPRET SURFACE TEXTURE SYMBOLS PER ASME Y14.36-1996

INTERPRET DIMENSIONS & TOLERANCES PER ASME Y14.5M-1994

3RD ANGLE

UNITS: INCHES

ONE PLACE ± .030
TWO PLACES ± .020
THREE PLACES ± .010
ANGULAR ± 1

FILLETS R.002/R.020
BREAK EDGES .002/.020 RADIUS OR CHAMFER
GENERAL FINISH 128 Ra MAX
REMOVE ALL BURRS

MATERIAL

FINISH

COMMENTS

WEIGHT:

THIS DRAWING AND THE CONTENTS HERIN ARE CONFIDENTIAL AND THE SOLE PROPERTY OF QUICK TIME PERFORMACNE REPRODUCTION OF THIS DRAWING OR CONSTRUCTION OF ANY PARTS WITHIN THIS DRAWING ARE FORBIDDEN WITHOUT PRIOR WRITTEN CONSENT

DRAWN BY	DATE	CHECKED BY	DATE
MP	4/20/2020		

TITLE: LOW PROFILE ELECTRIC CUTOUT

SIZE	DWG. NO.	REV
B	QTEC33_PDS	

SHEET 1 OF 1

SCALE: 1:1.5